10th World Congress on Structural and Multidisciplinary Optimization
May 19 - 24, 2013, Orlando, Florida, USA

Bilevel multiobjective optimization of vehicle layout

Paolo Guarneri[1], Brian Dandurand[2], Georges Fadel[1], Margaret M. Wiecek[2]

[1] Dept. Mechanical Engineering, Clemson University, Clemson, SC
[2] Dept. Mathematical Sciences, Clemson University, Clemson, SC
{pguarne,bdandur,fgeorge,wmalgor}@clemson.edu

1. Abstract
The layout design of hybrid electric vehicles (HEVs) is addressed considering that the layout depends on the shape of the components to be placed and that the component shape depends on its functionality. In this paper, the focus is on the battery, which is a critical component in HEVs. Since the vehicle layout and the battery designs require different theoretical backgrounds and their design is assigned to different collaborating teams, the problem is modeled through a bilevel decomposition. The various disciplines present at the vehicle and battery levels generate multiple criteria. A MultiObjective Decomposition Algorithm (MODA) is proposed to account for the conflicting multiple criteria and the related tradeoffs. Based on the block coordinate descent method, the method of multipliers, and a scalarization scheme, MODA computes Pareto solutions in a distributed fashion in concert with the features of multidisciplinary and multiobjective design problems. The numerical results show that MODA captures the teams' negotiation and the design tradeoffs occurring within and between the levels.
2. Keywords: Distributed Pareto computation, Decomposition, MDO.

3. Introduction
Multiobjective optimization mathematically describes design problems in which multiple conflicting criteria are considered. The solution of this type of problem is not unique but there exists a set of optimal solutions representing the optimal compromise, the so called optimal Pareto set. Many methods that have been proposed in the literature to compute Pareto solutions can be divided in two categories, the scalarizations and the set oriented methods. In the former, methods such as weighted-sum, ϵ-constraint, Chebyshev method, and normal boundary intersection method convert the multiobjective problem into single-objective problems whose optimal solutions are Pareto for the original multiobjective problem [1]. The latter includes methods such as genetic algorithms [2], which work on a population of individual solutions migrating towards the Pareto front, or (Quasi) Monte Carlo methods [3], which are based on the exploration of the design space through a sampling sequence of solutions that are then sorted according to the Pareto optimality criterion.
All of these methods have been developed without considering that the objectives, as well as the constraints, come from different disciplines or refer to different components in the system requiring the collaboration of design teams. This peculiarity was recognized by the researchers that have developed methods based on the decomposition of the problem into interconnected optimization subproblems. Methods based on hierarchical decomposition such as Analytical Target Cascading (ATC) [4] or Collaborative Optimization (CO) [5] and their nonhierarchical counterparts were developed to model the relationships among the design groups participating in the design process. Decomposition schemes such as Optimization by Linear Decomposition (OLD) [6], Concurrent SubSpace Optimization (CSSO) [7], Bi-Level Integrated System Synthesis (BLISS) [8], Quasi-separable Subsystem Decomposition (QSD) [9] have been developed to exploit parallel computation and differ in the way of maintaining subsystem consistency for coordination. These methods allow the presence of local objectives at each subproblem, suggesting that the computed solutions should represent a tradeoff of the different objectives and should therefore be related to the Pareto optimality. The need of extending Pareto optimality to MDO is reflected in the literature [10, 11, 12], however more theoretical foundations are required. The application of MDO to multiobjective problems can be found in [13, 14, 15, 16]. Multiobjective Collaborative Optimization [17] and Multiobjective Concurrent SubSpace Optimization [18] have been developed and presented. In [19], a strategy of sharing the information among the subproblems of a decomposed formulation is proposed for computing Pareto solutions. However, the subproblems share approximations of the objective functions in contrast with the fact that in MDO models should remain within each discipline.
In this paper a MultiObjective Decomposition Algorithm (MODA) is proposed for modeling the tradeoffs

in a bilevel problem and computing efficient solutions. The approach is based on the block coordinate descent method [20, 21] and the method of multipliers [20], and its convergence to Pareto solutions is claimed based on preexisting theoretical results. MODA is applied to the design of a hybrid electric vehicle layout and the results are discussed. Conclusions summarize the contributions of the paper.

4. Formulation of the Vehicle Layout Design Problem

The vehicle design problem motivating the application of MODA requires the optimal underhood placement of components whose shape and size vary in order to optimize component functionality. The engine, battery, radiator, coolant reservoir, air filter and brake booster are the components considered in this paper. The vehicle layout is designed with respect to its compactness, accessibility and survivability that are functions of the component locations and shapes. The locations are collected in vector $\mathbf{x}_l$ and the shapes are described by geometric parameters identified by vector $\mathbf{s}$. During the vehicle design process, the component shapes vary and depend on component design variable vector $\mathbf{x}_c$, i.e., $\mathbf{s} = \mathbf{s}(\mathbf{x}_c)$. In turn, the shapes are affected by the available space in the vehicle and could be potentially optimized to improve the quality of the vehicle layout. In this case, the vehicle designer might control the component shape operating on the parameter vector $\mathbf{s}$ that would become a vector of design variables, denoted by $\mathbf{x}_s$. This type of interaction between the vehicle and component levels is captured in a layout design problem with components that morph according to their design criteria. At the vehicle level the design variables can be collected in the vector $\mathbf{x}_v := [\mathbf{x}_l, \mathbf{x}_s]$. The determination of component shapes at both vehicle and component level requires consistency between both levels enforced by the constraint $\mathbf{h}(\mathbf{x_v}, \mathbf{x_c}) = \mathbf{0}$, where

$$\mathbf{h}(\mathbf{x}_v, \mathbf{x}_c) := \mathbf{x}_s - \mathbf{s}(\mathbf{x}_c). \tag{1}$$

The layout of electric or hybrid electric vehicles (EV or HEV) is heavily influenced by the battery pack arrangement. In this paper, given its predominant importance in EV or HEV, only the battery is considered as a morphing component. The battery pack design and its shape are determined in terms of cell spacing and battery aspect ratio, that is the number of cells in each row and column. The cell layout plays a key role for the battery heat rejection and thermal operating conditions that affect the chemical and electric behavior and, consequently, the battery performance and durability, and has direct impact on the battery geometry and therefore also on the vehicle layout.

At the vehicle level, the compactness is measured by the moment of inertia of the components with respect to the enclosure geometric center with coordinates x_G and y_G (to be minimized)

$$J_G(\mathbf{x}_v) := \sum_{i=1}^{6} \left(J_i + \left((x_i - x_G)^2 + (y_i - y_G)^2 \right) m_i \right), \tag{2}$$

where index i identifies all of the six components under the hood and m_i's and J_i's are their masses and moments of inertia, respectively. The accessibility of a component in a given layout is proportional to the number of components that have to be removed before accessing it from one direction (to be minimized). The layout accessibility is the sum of all the component accessibilities. For the layout in Fig. 1 (left), the component accessibilities are reported in Table 1. A weight is associated with each component to determine its importance. The components that require frequent access for maintenance are associated with larger weights. For a given layout solution $\mathbf{x}_v$, the accessibility is

$$A(\mathbf{x}_v) := \sum_{i=1}^{6} A_i(\mathbf{x}_v). \tag{3}$$

Vehicle survivability is intended here to represent the degree of protection offered to the components by the other components from impact with external bodies (to be maximized). The degree of protection is thus directly related to the overlapping area among components. For the layout in Fig. 1 (right), component 1 is partially protected by components 2 and 3 due to the overlapping areas O_{12} and O_{13}, respectively. The overlap area for component 1 is

$$O_1(\mathbf{x}_v) := O_{12}(\mathbf{x}_v) + O_{13}(\mathbf{x}_v), \tag{4}$$

which accounts for additional protection due to the double overlap offered by O_{123}. Weights p_i are introduced considering that some components are more crucial than others. The overlap area O_i is then normalized with respect to the area of ith component surface P_i. The vehicle survivability is given by

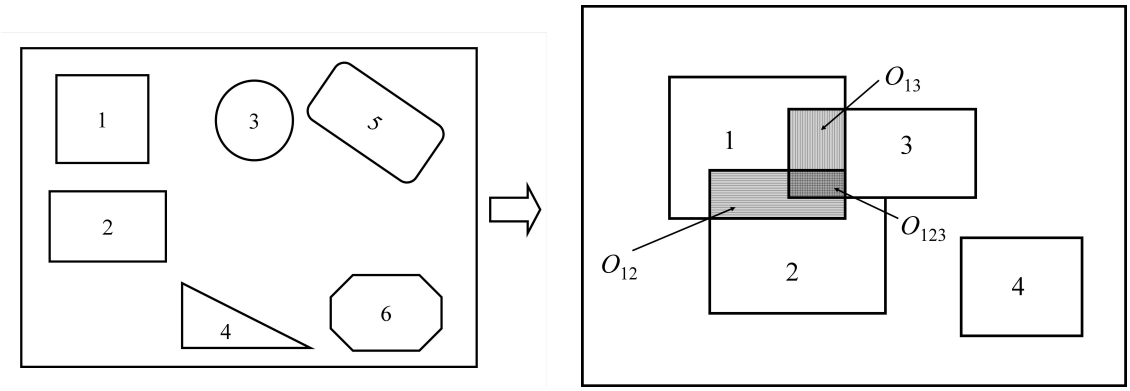

Figure 1: Computational schemes for accessibility (left) and survivability (right)

$$U(\mathbf{x}_v) := \sum_{i=1}^{6} p_i \frac{O_i(\mathbf{x}_v)}{P_i}. \tag{5}$$

The design problem reads

$$\begin{aligned} \min_{\mathbf{x}_v} \quad & \left[J_G(\mathbf{x}_v), A(\mathbf{x}_v), -U(\mathbf{x}_v)\right] \\ \text{s.t.} \quad & \mathbf{x}_v \in X_v, \end{aligned} \tag{6}$$

where the feasible set X_v is defined by the lower and upper boundaries on the component locations $\ell_{x,i}$, $\ell_{y,i}$, $\ell_{z,i}$ and $u_{x,i}$, $u_{y,i}$, $u_{z,i}$, and by the equality constraint $h_{overlap} = 0$ that prevents components overlapping. The battery shape variables coincide with the battery box dimensions, the length L_v and the width W_v (its height is fixed).

$$X_v := \left\{ \begin{array}{c} \mathbf{x}_v = (\mathbf{x}, \mathbf{y}, \mathbf{z}, L_v, W_v) \quad \text{s.t.} \\ \hline \ell_{x,i} < x_i < u_{x,i} \\ \ell_{y,i} < y_i < u_{y,i} \\ \ell_{z,i} < z_i < u_{z,i} \\ h_{overlap}(x_i, y_i, z_i, L_v, W_v) = 0 \\ \text{for } i = 1, \ldots, N_{comps} \end{array} \right\}.$$

Table 1: Accessibility values for the example in Fig. 1 (left)

Component	Weight	To be removed	Accessibility A_i
1	3	2	6
2	3	0	0
3	1	1	1
4	9	1	9
5	1	0	0
6	1	0	0

At the battery level, the objective is to achieve a cell temperature distribution as uniform as possible while targeting optimal operating conditions. The design variable vector $\mathbf{x}_c$ includes a spacing parameter p and the number of cell rows N_{rows} and columns N_{cols}. The spacing parameter determines the distance between the centers of two adjacent cells, $d_{center} = pd_{cell}$, where d_{cell} is the cell diameter. Let T_o be the optimal temperature and T_i be the temperature of the ith battery cell. Then the design problem can be formulated as

$$\begin{aligned} &\min_{\mathbf{x}_c} \left[(T_i(\mathbf{x}_c) - T_o)^2 \right]_{i=1,\ldots,N} \\ &\text{s.t.} \quad \mathbf{x}_c \in X_c, \end{aligned} \tag{7}$$

where X_c is the component level constraint set defined by

$$X_c := \left\{ \begin{array}{c} \mathbf{x}_c = (p, N_{cols}, N_{rows}, L_c, W_c) \quad \text{s.t.} \\ \hline 1 < p \leq 2, \\ N_{cols} \cdot N_{rows} = N, \\ N_{cols} \in \{9, 12, 18\}, \\ L_c = \left(p \cdot \cos(\frac{\pi}{6}) \cdot (N_{cols} - 1) + 3\right) \cdot d_{cell}, \\ W_c = p \cdot d_{cell} \cdot \left(N_{rows} + \frac{1}{2}\right) \end{array} \right\}.$$

These constraints include the boundaries on the spacing parameter p, the equality constraint on the total number of cells in the battery, the possible integer values for the number of columns, and the equality constraints on the shape variables L_c and W_c, the length and the width of the battery, respectively.
As reported in [22], due to the peculiar characteristics of the objectives, three properties apply to problem (7): comparability and anonymity of the objectives, and the Pigou-Dalton principle of transfer. The objectives are comparable because they measure the same physical quantity in the form of temperature deviations from T_o. The objectives are anonymous because the temperature is important but the cell that specifically exhibits this temperature is not. The third property, the Pigou-Dalton principle of transfer, is satisfied because evenly distributed cell temperature deviations are preferred. Due to these properties, the equitability preference [23], a refinement of the Pareto optimality, can be applied to the cell layout optimization problem. It is also shown in [23] that the equitable solutions of MOP (7) may be computed as the Pareto solutions of the following reformulated multiobjective problem

$$\begin{aligned} &\min_{\mathbf{x}_c} \quad \left[\overline{\theta}_q(\mathbf{x}_c) \right]_{q=1,\ldots,N} \\ &\text{s.t.} \quad \mathbf{x}_c \in X_c \end{aligned} \tag{8}$$

where $\overline{\theta}_q(\mathbf{x}_c)$ is the sum of the q largest deviations evaluated at $\mathbf{x}_c$. The objectives $\overline{\theta}_q(\mathbf{x}_c)$ may be computed as an optimal value of the following linear program (see [22, 23] for details)

$$\begin{aligned} \overline{\theta}_q(\mathbf{x}) := \min_{z_q, t_q, d_{q,i}} \quad & z_q \\ \text{s.t.} \quad & z_q \in \mathbb{R}, \quad t_q \in \mathbb{R}, \quad d_{q,i} \geq 0 \\ & \qquad\qquad\qquad\qquad i = 1, \ldots, N \\ & z_q = q\, t_q + \sum_{i=1}^{N} d_{q,i} \\ & t_q + d_{q,i} \geq (T_i(\mathbf{x}_c) - T_o)^2, \\ & \qquad\qquad\qquad\qquad i = 1, \ldots, N, \end{aligned} \tag{9}$$

where t_q and $d_{q,i}$ are auxiliary variables. This means that equitable solutions of (7) can be computed by applying the algorithms traditionally used for computing Pareto solutions to (8).
The integration of the vehicle layout and battery design problems results in the following problem

$$\begin{aligned} &\min_{\mathbf{x}_v, \mathbf{x}_c} \quad [\mathbf{f}_v(\mathbf{x}_v), \mathbf{f}_c(\mathbf{x}_c)] \\ &\text{s.t.} \quad \mathbf{x}_v \in X_v, \quad \mathbf{x}_c \in X_c \\ &\qquad \mathbf{h}(\mathbf{x}_v, \mathbf{x}_c) = \mathbf{0}, \end{aligned} \tag{10}$$

with $\mathbf{f}_v = \left[J_G, A, -U\right]$, $\mathbf{f}_c = \left[\overline{\theta}_q\right]_{q=1,\ldots,N}$ and

$$\mathbf{h} := \begin{bmatrix} L_c - L_v \\ W_c - W_v \end{bmatrix}.$$

The decomposed formulation of problem (10) reads

$$\begin{aligned} \min_{\mathbf{x}_v,\,\mathbf{x}_c} \quad & \mathbf{f}_v(\mathbf{x}_v) \\ \text{s.t.} \quad & \mathbf{x}_v \in X_v,\ \mathbf{x}_c \in X_c \\ & \mathbf{h}(\mathbf{x}_v, \mathbf{x}_c) = \mathbf{0} \end{aligned} \tag{11}$$

and

$$\begin{aligned} \min_{\mathbf{x}_v,\,\mathbf{x}_c} \quad & \mathbf{f}_c(\mathbf{x}_c) \\ \text{s.t.} \quad & \mathbf{x}_v \in X_v,\ \mathbf{x}_c \in X_c \\ & \mathbf{h}(\mathbf{x}_v, \mathbf{x}_c) = \mathbf{0}. \end{aligned} \tag{12}$$

This bilevel formulation models the design scenario with two design groups working on their specific problems. The decomposition is also justified by the distinct characteristics of the subproblems: the packaging problem (11) requires heuristic algorithms due to its high multimodality, while (12) is suitable for a gradient-based algorithm such as the sequential quadratic programming since the cell arrangement is forced on a triangular lattice. The optimization models have also been developed in different software environments [22]: the overlapping constraint at the vehicle level has been conveniently implemented in JAVA while the thermal model utilized at the battery level has been developed in Matlab/Simulink.
The equality constraint $\mathbf{h}(\mathbf{x}_v, \mathbf{x}_c) = \mathbf{0}$ coordinates the two subproblems and models the information flow between the design groups. Due to the high specialization of the groups, the information flow is limited to specific values $\overline{\mathbf{x}}_v$ and $\overline{\mathbf{x}}_c$ of the design variables that are communicated between them. That is, at the vehicle level there is no control over $\mathbf{x}_c$ and at the battery level the ability to modify $\mathbf{x}_v$ is prevented. In this sense, the bilevel formulation is modified as follows

$$\begin{aligned} \min_{\mathbf{x}_v} \quad & \mathbf{f}_v(\mathbf{x}_v) \\ \text{s.t.} \quad & \mathbf{x}_v \in X_v \\ & \mathbf{h}(\mathbf{x}_v, \overline{\mathbf{x}}_c) = \mathbf{0} \end{aligned} \tag{13}$$

and

$$\begin{aligned} \min_{\mathbf{x}_c} \quad & \mathbf{f}_c(\mathbf{x}_c) \\ \text{s.t.} \quad & \mathbf{x}_c \in X_c \\ & \mathbf{h}(\overline{\mathbf{x}}_v, \mathbf{x}_c) = \mathbf{0}. \end{aligned} \tag{14}$$

5. MultiObjective Decomposition Algorithm (MODA)

The proposed decomposition algorithm provides the tradeoff modeling required by the multiple conflicting objectives present in (13) and (14) and the coordination between the subproblems for the computation of the efficient solutions of (10). These concepts are discussed separately since the coordination strategy is not restricted by the way the tradeoffs are dealt with.

5.1. Bilevel tradeoff modeling

Pareto solutions of (10) are computed through a weighted-sum scalarization. *Nonnegative* intra-subproblem weights $\mathbf{w}_v$, with $\sum_i \mathbf{w}_{vi} = 1$, and $\mathbf{w}_c$, with $\sum_i \mathbf{w}_{ci} = 1$, are used to represent the tradeoffs within each level and describe the preference of the design groups according to their specialized knowledge of the subproblems. Aggregated objectives $f_v = \mathbf{w}_v^T \mathbf{f}_v$ and $f_c = \mathbf{w}_c^T \mathbf{f}_c$ result in a biobjective problem

$$
\begin{aligned}
\min_{\mathbf{x}_v, \mathbf{x}_c} \quad & [f_v(\mathbf{x}_v), f_c(\mathbf{x}_c)] \\
\text{s.t.} \quad & \mathbf{x}_v \in X_v, \quad \mathbf{x}_c \in X_c \\
& \mathbf{h}(\mathbf{x}_v, \mathbf{x}_c) = \mathbf{0},
\end{aligned} \tag{15}
$$

that can be treated with *positive* inter-subproblems weights α_v and α_v, with $\alpha_v + \alpha_v = 1$, that assign a weighting of importance to the vehicle and the battery levels. The distinction between intra- and inter- subproblem weights finds its natural motivation in the design scenario in which each group is responsible for the respective subproblem tradeoffs while the bilevel tradeoff is handled outside of the groups. Efficient solutions of (10) are then computed solving the following single-objective problem with different combinations of the intra- and inter- subproblem weights

$$
\begin{aligned}
\min_{\mathbf{x}_v, \mathbf{x}_c} \quad & \alpha_v f_v(\mathbf{x}_v) + \alpha_c f_c(\mathbf{x}_c) \\
\text{s.t.} \quad & \mathbf{x}_v \in X_v, \quad \mathbf{x}_c \in X_c \\
& \mathbf{h}(\mathbf{x}_v, \mathbf{x}_c) = \mathbf{0}.
\end{aligned} \tag{16}
$$

5.2. Solution algorithm

Considering the bilevel formulation given by (13) and (14), Pareto solutions of (10) cannot be computed directly using formulation (16). To exploit the paradigm of decomposition, the equality constraint $\mathbf{h}(\mathbf{x}_v, \mathbf{x}_c) = \mathbf{0}$ is relaxed by incorporating Lagrangian and penalty terms in the objective function

$$
\begin{aligned}
\min_{\mathbf{x}_v, \mathbf{x}_c} \quad & \alpha_v f_v(\mathbf{x}_v) + \alpha_c f_c(\mathbf{x}_c) \\
& + \mathbf{u}^T \cdot \mathbf{h}(\mathbf{x}_v, \mathbf{x}_c) + \frac{\mu}{2} \|\mathbf{h}(\mathbf{x}_v, \mathbf{x}_c)\|_2^2 \\
\text{s.t.} \quad & \mathbf{x}_v \in X_v, \quad \mathbf{x}_c \in X_c,
\end{aligned} \tag{17}
$$

where $\mathbf{u}$ denotes the Lagrange multipliers associated with the equality constraint and $\mu > 0$ is a penalty coefficient [20]. The bilevel formulation of (17) induced by the decomposition is

$$
\begin{aligned}
\min_{\mathbf{x}_v} \quad & \alpha_v \, f_v(\mathbf{x}_v) + \mathbf{u}^T \cdot \mathbf{h}(\mathbf{x}_v, \overline{\mathbf{x}}_c) + \frac{\mu}{2} \|\mathbf{h}(\mathbf{x}_v, \overline{\mathbf{x}}_c)\|_2^2 \\
\text{s.t.} \quad & \mathbf{x}_v \in X_v
\end{aligned} \tag{18}
$$

and

$$
\begin{aligned}
\min_{\mathbf{x}_c} \quad & \alpha_c \, f_c(\mathbf{x}_c) + \mathbf{u}^T \cdot \mathbf{h}(\overline{\mathbf{x}}_v, \mathbf{x}_c) + \frac{\mu}{2} \|\mathbf{h}(\overline{\mathbf{x}}_v, \mathbf{x}_c)\|_2^2 \\
\text{s.t.} \quad & \mathbf{x}_c \in X_c.
\end{aligned} \tag{19}
$$

For fixed $\mathbf{u}$ and μ, the distributed computation of optimal solutions for problem (17) is addressed with the use of the Block Coordinate Descent (BCD) method applied to instances of subproblems (18) and (19). The BCD method is a Gauss-Seidel method based on sequential updates of variable blocks, that in (17) are $\mathbf{x}_v$ and $\mathbf{x}_c$. The objective function is iteratively minimized with respect to one block, i.e., $\mathbf{x}_v$ (or $\mathbf{x}_c$), while the other is fixed to the most recent update, $\overline{\mathbf{x}}_c$ (or $\overline{\mathbf{x}}_v$), until no further improvement is possible.

Due to the relaxation of the constraint $\mathbf{h}(\mathbf{x}_v, \mathbf{x}_c) = \mathbf{0}$, the solutions obtained by the BCD method are not, in general, feasible for (16). In this paper, the method of multipliers [20] is used to update the Lagrange multipliers $\mathbf{u}$ and the penalty parameter μ to obtain optimal solutions to (17) that are feasible for (16). The method of multipliers updates have the form

$$
\mathbf{u}^{k+1} = \mathbf{u}^k + \mu_k(\mathbf{h}(\mathbf{x}_v^k, \mathbf{x}_c^k)) \tag{20}
$$

$$
\mu_{k+1} = c\mu_k \quad 2 \leq c \leq 10. \tag{21}
$$

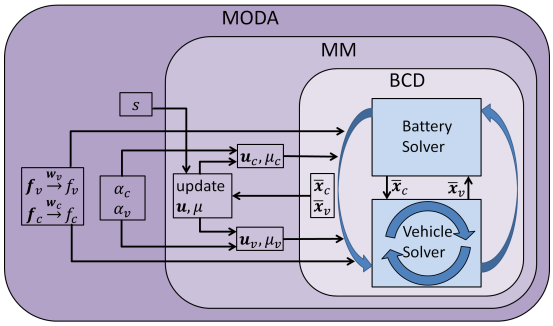

Figure 2: MODA flowchart

Updates (20) and (21) are performed on the fixed values $\mathbf{u}$ and μ of problem (17) until optimal solutions for the relaxed problem (17) satisfy $\mathbf{h}(\mathbf{x}_v, \mathbf{x}_c) = \mathbf{0}$ within tolerance, thus achieving feasibility for problem (16).
The integration of the BCD method and the method of multipliers as applied to the coordinated and distributed computation of optimal solutions for multiple instances of problem (16) is depicted in Fig. 2. Multiple instances of problem (16) resulting from multiple weight vectors $[\mathbf{w}_v, \mathbf{w}_c, \alpha_v, \alpha_c]$ are solved using MODA in order to compute multiple Pareto solutions to (10) and explore tradeoff of the bilevel problem.

5.3. Convergence of MODA

Each solution computed with MODA is a limit point $(\mathbf{x}_v^*, \mathbf{x}_c^*, \mathbf{u}^*)$ of a generated sequence $\{(\mathbf{x}_v^k, \mathbf{x}_c^k, \mathbf{u}^k)\}$ obtained through iterative subproblem optimizations on instances of (18) and (19), and through sporadic updates on multiplier $\mathbf{u}$. These updates are arranged in such a manner so that a subsequence $\{(\mathbf{x}_v^k, \mathbf{x}_c^k, \mathbf{u}^k)\}_K$ may be identified that adequately approximates another sequence $\{(\widehat{\mathbf{x}}_v^k, \widehat{\mathbf{x}}_c^k, \widehat{\mathbf{u}}^k)\}$; this other sequence $\{(\widehat{\mathbf{x}}_v^k, \widehat{\mathbf{x}}_c^k, \widehat{\mathbf{u}}^k)\}$ would have been generated by the method of multipliers applied to the AiO problem (16) if this problem were explicitly available. In this case, an optimal solution-multiplier $(\mathbf{x}_v^*, \mathbf{x}_c^*, \mathbf{u}^*)$ for the AiO problem (16) is computed in a distributed, coordinated manner as a limit point of the MODA-generated sequence $\{(\mathbf{x}_v^k, \mathbf{x}_c^k, \mathbf{u}^k)\}$. Arranging the updates on $\mathbf{x}_v$, $\mathbf{x}_c$, and $\mathbf{u}$ during the generation of the MODA sequence $\{(\mathbf{x}_v^k, \mathbf{x}_c^k, \mathbf{u}^k)\}$ in such a manner is based on the integration of the convergence analyses of the method of multipliers [20] and the BCD method [21], with the assumption that intermediate computations on the former are inexact. Details of the proof of convergence are in [24].

6. Numerical results

Solutions of the vehicle layout design problem have been computed in a distributed fashion with MODA. Three different battery aspect ratios are explored for $N_{cols} \in \{9, 12, 18\}$. The vehicle level weight vector is fixed, $\mathbf{w}_v = [0.01, 50, 50]$, with the purpose of scaling the indices measuring the layout compactness, accessibility and survivability. As it is shown, this does not prevent the exploration of the tradeoff at the vehicle level due to the bilevel interaction. Three weight vectors are considered at the battery level for each aspect ratio

$$\mathbf{w}_c^1 := \begin{bmatrix} 1 & 2^{-1} & 2^{-2} & \dots & 2^{-(N_{cols}-2)} & 2^{-(N_{cols}-1)} \end{bmatrix}$$

$$\mathbf{w}_c^2 := \begin{bmatrix} 1 & 1 & \dots & \dots & 1 & 1 \end{bmatrix}$$

$$\mathbf{w}_c^3 := \begin{bmatrix} 2^{-(N_{cols}-1)} & 2^{-(N_{cols}-2)} & \dots & 2^{-2} & 2^{-1} & 1 \end{bmatrix}.$$

The first one, $\mathbf{w}_c^1$, emphasizes the first component $\overline{\theta}_1(\mathbf{x}_c)$ in (8) that, due to the definition of $\overline{\theta}_q(\mathbf{x}_c)$, is the maximum deviation from the optimal operating temperature. The third one, $\mathbf{w}_c^3$, assigns relevance to $\overline{\theta}_N(\mathbf{x}_c)$ in (8), thus, the preference is towards the minimization of the sum of all the deviations. The second, $\mathbf{w}_c^2$, represents an intermediate design preference with respect to the previous ones. The tradeoff between the levels is considered by setting

$$\alpha_v =: \frac{1}{1+\beta} \quad \alpha_c := \frac{\beta}{1+\beta}$$

with $\beta \in \{1, 10, 100, 1000\}$, giving more importance to the battery level as β increases. The 3 aspect ratios and the 12 weight combinations result in 36 optimization problems. In Tabs. 2 and 3 results are reported for 9×8 and 18×4 aspect ratios, 12×6 results are omitted for brevity.

Table 2: Solutions computed using MODA (9 columns, 8 rows)

Battery level weight: $\mathbf{w}_c^1$

β	1	10	100	1000
f_v	-32.822	-376.019	-255.698	-207.100
f_c	35.906	5.920	0.864	0.059
J_G	92823.050	77430.460	80928.470	89032.060
A	0.000	1.000	0.000	1.000
U	19.221	24.006	21.300	22.947
p	1.236	1.057	1.095	1.117

Battery level weight: $\mathbf{w}_c^2$

β	1	10	100	1000
f_v	-660.469	-360.716	-293.274	260.857
f_c	57.098	5.467	2.390	0.078
J_G	74841.670	95503.230	79943.660	95781.840
A	1.000	0.000	2.000	0.000
U	29.177	26.315	23.852	13.939
p	1.015	1.078	1.150	1.118

Battery level weight: $\mathbf{w}_c^3$

β	1	10	100	1000
f_v	-439.028	-182.589	6.555	-249.299
f_c	2.123	1.863	0.116	0.125
J_G	78804.310	83953.760	89331.580	95793.220
A	1.000	0.000	1.000	1.000
U	25.540	20.442	18.734	25.144
p	1.097	1.099	1.121	1.116

Table 3: Solutions computed using MODA (18 columns, 4 rows)

Battery level weight: $\mathbf{w}_c^1$

β	1	10	100	1000
f_v	-381.987	-178.959	-198.840	-210.174
f_c	9.443	4.222	6.089	0.217
J_G	82449.230	88616.670	94997.310	90771.990
A	1.000	1.000	2.000	0.000
U	25.129	22.302	24.974	22.358
p	1.046	1.181	1.060	1.116

Battery level weight: $\mathbf{w}_c^2$

β	1	10	100	1000
f_v	453.512	-306.231	-145.122	-470.798
f_c	7.039	4.141	0.631	0.589
J_G	91212.830	79380.660	89841.730	89010.340
A	1.000	0.000	1.000	2.000
U	10.171	22.001	21.870	29.216
p	1.156	1.144	1.120	1.116

Battery level weight: $\mathbf{w}_c^3$

β	1	10	100	1000
f_v	8.105	-315.012	-56.439	-137.478
f_c	59.288	0.749	0.892	0.750
J_G	83808.680	77789.670	82140.090	80704.000
A	1.000	0.000	1.000	1.000
U	17.599	21.858	18.556	19.889
p	1.047	1.117	1.122	1.117

The bilevel tradeoff is captured by MODA as demonstrated by the values of f_v anf f_c decreasing and increasing, respectively, as β increases. For $\beta = 1000$, a relatively large importance is assigned to the battery design over the vehicle layout design. In this case, the optimal (equitable) value of p is approximately 1.12, which is the equitable cell spacing reported in [22] when *only* the battery problem is considered. The bilevel negotiation is made possible by the equality constraint $\mathbf{h}(\mathbf{x}_v, \mathbf{x}_c) = \mathbf{0}$ that is satisfied at optimality within engineering tolerances. As mentioned above, only one weight combination $\mathbf{w}_v$ is considered but the effect of the bilevel interaction is evident from Fig. 3 that depicts two different layouts obtained with 9×8 batteries in the case of w_c^2 with $\beta = 1$ and $\beta = 1000$. The different arrangements of the underhood components are due to the different battery dimensions that are determined by the optimal spacing parameter values ($p = 1.015$ and $p = 1.118$) reported in Table 2. The designer preference at the component level translates into the component morphing with a significant impact on the decisions at the vehicle level: this interaction is fully modeled through MODA.
The numerical results demonstrate the applicability of MODA for tradeoff capturing and bilevel coordination, however, the following issues affecting the convergence of MODA must be considered in the analysis

- lack of convexity of the feasible set X_v.
- multimodality of the problem a the vehicle level, implying that the tradeoffs cannot be properly explored through a weighted-sum scalarization.
- optimality that is not guaranteed when genetic algorithms are utilized to compute optimal solutions.

These issues could prevent the optimizer from converging towards global optimal solutions but did not prevent MODA from obtaining feasible solutions. In fact, the equality constraint $\mathbf{h}(\mathbf{x}_v, \mathbf{x}_c) = \mathbf{0}$ is satisfied showing that the bilevel negotiation occurred and that the design groups could reach an agreement on the design solution.

7. Conclusions

Engineering design problems motivate the development of algorithms for solving multiobjective problems

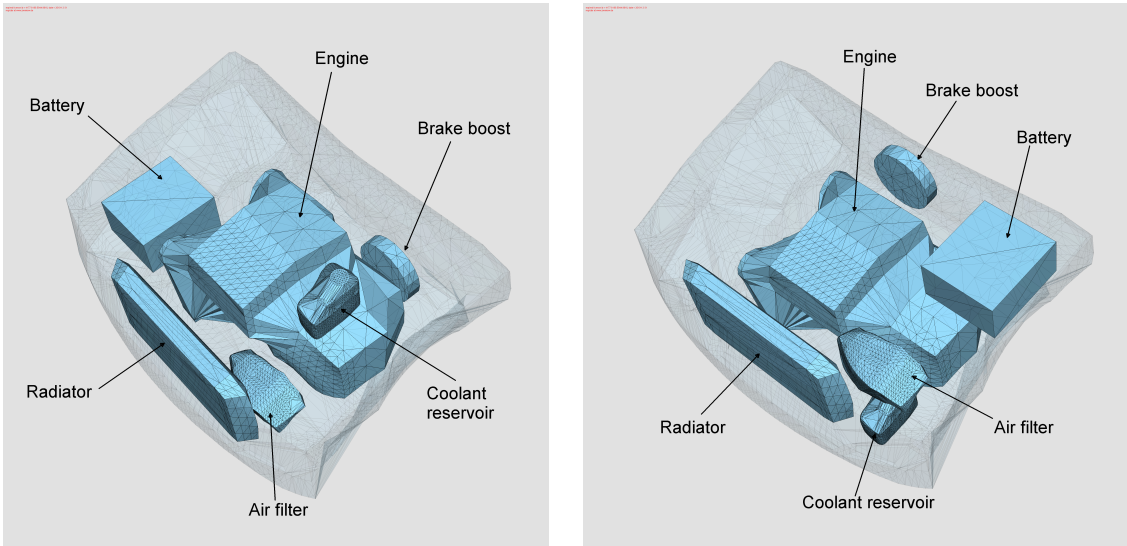

Figure 3: Vehicle layout with 9×8 aspect ratio, $\mathbf{w}_c^2$, $\beta = 1$ (left) and $\beta = 1000$ (right)

with multiple interacting disciplines and subsystems. The level of specialization of the design teams required in the design process must be respected by the mathematical formulation and solving strategy. A MultiObjective Decomposition Algorithm is an algorithm for the distributed computation of Pareto solution that is developed to deal with bilevel design problems and reflects the two main concepts of engineering design: the tradeoff analysis and the design specialization. Tradeoffs are taken into account through a weighted-sum scalarization and the design specialization is considered by the decomposition and the coordination of the resulting subproblems. Subproblems are formulated in light of the peculiar characteristics of the subsystems and disciplines and their coordination represents the design groups' negotiation. The design of the battery and vehicle layout for electric and hybrid electric vehicles is addressed through MODA considering that the vehicle layout and the battery design are assigned to two different design teams specializing in the respective design areas and disciplines involving multiple design criteria. The numerical results demonstrate the capabilities of MODA and encourage its extension to multiple levels and the exploration of scalarization techniques other than the weighted-sum for tradeoff handling.

8. Acknowledgments

We thank Dr. Dohoy Jung and his team from the University of Michigan-Dearborn, who supplied us with the battery thermal model. The views presented in this work do not necessarily represent the views of our sponsors, the Automotive Research Center, a center of excellence of the US Army TACOM, and the National Science Foundation, Grant No. CMMI-1129969, whose support is greatly appreciated.

9. References

[1] M. Ehrgott and M.M. Wiecek, Multiobjective Programming, in: *Multiple Criteria Decision Analysis: State of the Art Surveys*, J. Figueira, S. Greco, M. Ehrgott (Eds.), Springer, New York, 2005, pp. 667-722.

[2] K. Deb, *Multi-objective optimization using evolutionary algorithms*, John Wiley & Sons, New York, NY, 2001.

[3] R.B. Statnikov and J.B. Matusov, *Multicriteria optimization and engineering*, Chapman & Hall, New York, NY, 1995.

[4] H.M. Kim, N.F. Michelena, P.Y. Papalambros and T. Jiang, Target cascading in optimal system design, *Journal of Mechanical Design*, 125, 474-480, 2003.

[5] R. Braun R. and I. Kroo, Development and application of the collaborative optimization architecture

in a multi-disciplinary design environment, *Multidisciplinary Design Optimization*, N. Alexandrov, M. Hussaini (Eds.), Ed. Philadelphia: SIAM, 1997.

[6] J. Sobieszczanski-Sobieski, B. James and A. Dovi, Structural optimization by multilevel decomposition, *AIAA Journal*, 23(11), 124-142, 1985.

[7] J. Sobieszczanski-Sobieski, A step from hierarchic to non-hierarchic systems, *2nd NASA Air Force symposium on recent advances in multidisciplinary analysis and optimization*, 1988.

[8] J. Sobieszczanski-Sobieski, J. Agte and R.R. Sandusky, Bi-level integrated system synthesis (BLISS), *in Proc. 7th AIAA/AAIS/USAF/ISSMO*, St. Louis, 1998, paper AIAA-98-4916.

[9] R. Haftka and L. Watson, Multidisciplinary design optimization with quasiseparable subsystems, *Optimization and Engineering*, 6(1), 9-20, 2005.

[10] A. Engau and M.M. Wiecek, 2D decision making for multi-criteria design optimization, *Structural and Multidisciplinary Optimization*, 34(4), 301-315, 2007.

[11] M. Gardenghi, F. Miquel, T.G. Nunez and M.M. Wiecek, Algebra of efficient sets for complex systems, *Journal of Optimization Theory and Applications*,149, 385-410, 2011.

[12] M. Gardenghi and M.M. Wiecek, Efficiency for multiobjective multidisciplinary optimization problems with quasi-separable subsystems, *Optimization and Engineering*,13(2), 293-318, 2012.

[13] R. Makinen, J. Periaux and J. Toivanen, Multidisciplinary shape optimization in aerodynamics and electromagnetics using genetic algorithms, *International Journal for Numerical Methods in Fluids*, 30(2), 149-159, 1999.

[14] D. Peri and E. Campana, Multidisciplinary design optimization of a naval surface combatant, *Journal of Ship Research*, 47(1), 1-12, 2003.

[15] N. Cristello and I. Kim, Multidisciplinary design optimization of a zero-emission vehicle chassis considering crashworthiness and hydroformability, *Proceedings of the Institution of Mechanical Engineers, Part D: Journal of Automobile Engineering*, 221, 511-526, 2007.

[16] J. Donndelinger, S. Ferguson and K. Lewis, Exploring mass trade-offs in preliminary vehicle design using Pareto sets, *Collection of Technical Papers, 11th AIAA/ISSMO Multidisciplinary Analysis and Optimization Conference*, 3, 1806-1815, 2006.

[17] R.V. Tappeta and J.E. Renaud, Multiobjective collaborative optimization, *Journal of Mechanical Design*, 119(3), 403-411, 1997.

[18] C.H. Huang, J. Galuski and C. Bloebaum, Multi-objective Pareto concurrent subspace optimization for multidisciplinary design, *AIAA Journal*, 45(8), 1894-1906, 2007.

[19] F. Ciucci, T. Honda and M.C Yang, An information-passing strategy for achieving Pareto optimality in the design of complex systems, *Research in Engineering Design*, 23(1), 71-83, 2012.

[20] D. Bertsekas, *Nonlinear Programming*, Athena Scientific, 1999.

[21] P. Tseng, Convergence of a block coordinate descent method for nondifferentiable minimization, *Journal of Optimization Theory and Applications*, 109(3), 475-494, 2001.

[22] B. Dandurand, P. Guarneri, G. Fadel and M.M. Wiecek, Equitable multiobjective optimization applied to the design of a hybrid electric vehicle battery, *Journal of Mechanical Design*, 135(4), 041004, 2013.

[23] M. Kostreva, W. Ogryczak and A. Wierzbicki, Equitable aggregations and multiple criteria analysis, *European Journal of Operations Research*, 158(2), 362-377, 2004.

[24] B. Dandurand, Mathematical optimization for engineering design problems, PhD dissertation, Dept. of Mathematical Sciences, Clemson University, Clemson, SC, 2013.